April 12, 2016

Ms. Rebecca Thompson
NHE Inc.
5 Legacy Park Road, Suite A
Greenville, South Carolina 29607

Re: Mechanically Stabilized Earth Retaining Wall Review
Cobble Stone
Putney Bridge Lane
Simpsonville, South Carolina
ECS Project No. 39-1298

Dear Rebecca:

As authorized by your acceptance of ECS Proposal Number 39-1267-P, ECS Carolinas, LLP (ECS) has completed our review of the mechanically stabilized earth retaining walls (MSEWs) for the above-referenced project. In summary, our services included meeting with Mr. Joe Yanek of the Cobblestone POA, making observations of accessible portions of the MSEWs and culvert, and preparing this report of findings of recommendations. The following sections of this report summarize pertinent project information, our field observations, engineering opinions and recommendations.

PROJECT OVERVIEW

Based upon our review of available online aerial photography, Cobblestone is a residential community that appears to have been developed in phases since approximately 2003/2004. In order to provide access to areas south of Peters Creek, a “bottomless” arched culvert was installed to extend Putney Bridge Lane. The attached 2004 Aerial Photograph (Figure 1) depicts the general area of the creek crossing and surrounding features shortly after construction, while the 2014 Aerial Photograph (Figure 2) depicts overall site conditions similar to those we observed. No design and construction documents related to the mass grading for the community, culvert and MSEWs have been provided for our review.

For the purpose of this report, two MSEWs have been identified in conjunction with the Peters Creek crossing. The first wall is located immediate east of Putney Bridge Lane and provides grade separation directly above the culvert and areas north and south of Peters Creek. The second wall is located immediately west of Putney Bridge Lane and provides grade separations similar to the east wall. The approximate maximum vertical separation between the top of the MSEWs and Peters Creek is about 20 feet, with the MSEWs becoming shorter to the north and south. Putney Bridge Lane and associated improvements directly overlie the culvert.

FIELD OBSERVATIONS

Observations of readily accessible portions of each MSEW were made by our Mr. Stephen Geiger, P.E. on April 6 and 11, 2016. The following sections discussion pertinent observations of each MSEW.

East MSEW

- Typical masonry block set back of approximately one inch
- Low and relatively flat areas along top of wall
- No through wall drains evident
- Efflorescence above culvert
- Soil staining on wall face
- Displaced masonry blocks ends of south and north wings
- Missing cap blocks end of south wing
- Localized erosion end of south and north wings above displaced masonry blocks
- Abrupt termination south end of wall
- Back of masonry blocks exposed near top of south and north wings.
- Woody vegetation in close proximity to toe of north wing
- Depression behind curb and in front of stone knee wall above culvert. Depression may be associated with former shrubbery.
- Poor surface water drainage above wall
- Sparse groundcover along toe of south and north wings, towards culvert
- Stormwater infrastructure behind and beyond wall

West MSEW

- Typical masonry block set back approximately one inch
- Low and relatively flat areas along top of wall
- No through wall drains evident
- Soil staining on wall face
- Vegetation hanging over face of wall south of culvert
- Landscaping overgrowing top of south wing
- Localized erosion end of north wing beyond concrete headwall
- Voids behind concrete headwall
- Woody vegetation immediately behind top of north wing
- Woody vegetation in close proximity to toe of north wing
- Back of masonry blocks exposed near top of south and north wings.
- Woody vegetation in close proximity to toe of wall
- Poor surface water drainage above wall
- Stormwater infrastructure behind and below wall
- River rock and corrugated drainage pipe along toe of south wing
- Severe embankment instability immediately west of southwest end of culvert

Culvert

The culvert is an arched bottomless culvert. Fabricator markings on the corrugated culvert panels indicate the culvert is a pre-engineered structure by Contech Construction Products. The specification stamping indicates AASHTO 167M which indicates conformance with the "Standard Specification for Corrugated Steel Structural Plate, Zinc-Coast, for Field-Bolted Pipe, Pile-Arches and Arches". The stamping also states "3 oz. Coating". The culvert appears to functioning as intended with no readily observable deflection. The majority of the bolted connections appear free of corrosion with the exception of a few closest to the east and west

ends of the culvert. Staining indicative of corrosion or soil migration through bolt holes is also present along the perimeter edge angles. Portland cement concrete is exposed north of Peters Creek near the east end of the culvert. It is possible the buried concrete may be the north strip footing for the culvert. Exploratory work to expose the culvert foundations was beyond th scope of our work. Varying amounts of water deposited soil have accumulated adjacent to the north and south extents of the culvert.

Digital photographs of pertinent MSEW and culvert conditions taken during our site visit are attached to this report. The photographs are intended to represent both typical conditions, as well as conditions of concern, within readily accessible areas of the site.

LIMITED SUBSURFACE EXPLORATION

Four (4) shallow hand auger borings (HA-1 through HA-4) were performed in close proximity to the MSEWs. Within each hand auger boring dynamic cone penetrometer testing (ASTM STP 399) was performed at approximately one-foot intervals to the boring termination depth. Representative samples were also obtained at approximately one-foot intervals, placed in Ziploc bags, and returned to our office for visual classification by a geotechnical engineer. Borings HA-1 and HA-2 were performed above the MSEWs, while borings HA-3 and HA-4 were performed near the toe of the MSEWs near Peters Creek. The approximate locations of the hand auger borings are indicated on the attached Hand Auger Boring Location Plan (Figure 3).

Borings HA-1 and HA-2 encountered materials classified as fill to their termination depth of 5 feet. The DCP resistances in these borings were low to moderate and ranged from 2 to 9 blows per 1 ¾-inch increment (bpi). The sampled soils typically classified as moist to wet fine sandy silt (ML) and silty fine sand (SM). In some instances rock fragments and occasional organic matter were observed in the sampled fill.

Boring HA-3 was performed just above an existing escarpment associated with the embankment instability west of the culvert and south of Peters Creek. This boring encountered low consistency residual soil throughout its entire depth. The recovered soil samples typically classified as wet, fine sandy silt (ML). Trace amounts of small roots were observed in some of the sampled residuum. The DCP resistances in the residual soil were low and ranged from 1 to 4 bpi.

Boring HA-4 was performed north of Peters Creek and east of culvert. This boring encountered alluvial soil to the refusal depth of about 2 feet. The alluvial soil classified as moist, silty fine sand (SM) with gravel. The DCP resistance in alluvial soil varied from 2 to more than 20 bpi. The elevated DCP resistances are likely the result of gravel sized inclusions.

RECOMMENDATIONS AND OPINIONS

The intent of the following general recommendations is to help enhance the long term performance of the MSEWs. The majority of these general recommendations are related to restoring and maintaining proper drainage in the areas immediately above and below the walls.

The following *general recommendations* apply to the MSEWs.

1. Surface water drainage should be improved along the top of the MSEWs. The drainage improvements should divert surface water away from the MSEWs without significantly interrupting its flow and to prevent overtopping and erosion. A typical detail for a drainage swale above the top of the MSEW is attached (Figure 4).
2. Areas of localized erosion above/behind the walls should be repaired. Properly compacted earth fills should be placed in all areas where the backs of the masonry blocks are exposed.
3. Woody vegetation within 3 feet of the top of the MSEWs should be removed and periodic maintenance performed to limit future growth.
4. Woody vegetation within 3 feet of the toe of the MSEWs should be removed and periodic maintenance performed to limit future growth.
5. Vegetation that has overgrown the face of the MSEWs should be removed and periodic maintenance performed to limit future growth.
6. Displaced masonry units should be reset to the proper position/alignment.
7. The abrupt wall termination at the end of south wing of the east wall should be modified to a gradual taper.
8. Displaced cap blocks should be reset with construction adhesive.
9. Missing cap blocks should be installed and secured with construction adhesive.

With regard to the arched culvert, we recommend the following:

1. Fasteners exhibiting corrosion should be repaired in accordance with culvert manufacturer's recommendations.
2. The exposed concrete exposed near the northeastern corner of the culvert should be investigated to confirm if it is the culver foundation. If the exposed concrete is the culvert foundation, appropriate protections should be installed to prevent ground loss around and below the foundation.
3. Bolted connections should be periodically observed to verify their overall condition and tightness.

Formal assessment of the embankment instability along the south bank of Peters Creek west of the culvert was beyond the scope of this retaining wall review. Evidence of tension cracks were observed in the ground surface south of the embankment crest. However, continued/progressive embankment failures could expose the south culvert foundation and undermine the south wing of the west MSEW. The embankment instability appears primarily related to the embankment geometry, engineering properties of the exposed soils, and flow of water in Peters Creek.

We strongly recommend that the embankment stability be formally evaluated by a qualified geotechnical engineer and that an engineered solution be developed to permanently stabilize/repair the embankment. The final engineered solution may also require assistance from a qualified civil engineer to aid in considering flow within Peters Creek. It is important to

note that because the embankment repairs will occur adjacent to jurisdictional waters, regulatory permitting through the SCDHEC and the USACE will likely be required prior to undertaking the repairs.

The decision to adhere to the recommendations presented herein is a risk based decision that only the client and/or POA can make. We strongly recommend that the corrective activities for the MSEWs and culvert be implemented in a timely manner. The recommended repairs associated with surface water drainage should be coordinated with a qualified civil engineer. Due to the progressive nature of the embankment instability, we strongly recommend formal evaluation of the distressed embankment be undertaken immediately.

CLOSING

Formal design services and construction phase observations are not included in the scope of work associated with the MSEW review. However, we would be pleased to further assist you in that capacity under separate agreement. ECS appreciates the opportunity to be of assistance to you and the POA. Please do not hesitate to contact the undersigned with any questions concerning this letter or our services.

Respectfully,
ECS CAROLINAS, LLP represented by;

Stephen J. Geiger, P.E.
Chief Engineer

Attachments: Aerial Photographs
ECS Photographs
Hand Auger Boring Location Plan
Hand Auger Boring Summary
Typical Drainage Swale Detail

I:/geotech/1200/1298/39-1298 letter.doc

ATTACHMENTS

Aerial Photographs

ECS Photographs

Hand Auger Boring Location Plan

Hand Auger Boring Summary

Typical Drainage Swale Detail

SEPTEMBER 2004

AERIAL PHOTOGRAPH

SOURCE: GOOGLE EARTH

ECS

PUTNEY BRIDGE LANE

SIMPSONVILLE, SOUTH CAROLINA

ENGINEER SG	SCALE NONE
DRAFTSMAN JMC	PROJECT NO. 39-1298
REVISIONS	SHEET 1
	DATE 04/11/16

APRIL 2014

AERIAL PHOTOGRAPH

SOURCE: GOOGLE EARTH

ECS

PUTNEY BRIDGE LANE

SIMPSONVILLE, SOUTH CAROLINA

ENGINEER SG	SCALE NONE
DRAFTSMAN JMC	PROJECT NO. 39-1298
REVISIONS	SHEET 2
	DATE 04/11/16

Putney Bridge Lane
Greenville, South Carolina
April 2016 Photographs
ECS Project No. 39-1298

Photo 1 - Putney Bridge Lane looking south.

Photo 2 - Location of HAB-1, above north wing of west MSEW.

Photo 3 - Top of MSEW beyond southbound lane of Putney Bridge Lane.

Photo 4 - Area above top of south wing of west MSEW looking south.

Photo 5 - Embankment instability west of south end of culvert beneath west MSEW.

Photo 6 - Near field view of embankment instability and rip-rap sloughing in Photo 5. HAB-3 in left side of photo.

Photo 7 - Putney Bridge Lane looking north.

Photo 8 - Area above top of south wing of east MSEW.

Photo 9 - Area above top of east MSEW looking north.

Photo 10 - Area above north wing of east MSEW looking north.

Photo 11 - Erosion and displaced cap block, north wing of east MSEW.

Photo 12 - Face of north wing of east MSEW. Note soil staining on face of wall.

Photo 13 - Face of east MSEW over culvert.

Photo 14 - Face of south wing of east MSEW beyond culvert.

Photo 15 - Stream and bank conditions southeast end of culvert.

Photo 16 - Conditions beneath north end of culvert. Note area of embankment instability upper left side of photo.

Photo 17 - Erosion, displaced block and missing cap blocks south end of west MSEW.

Photo 18 - Near field view of conditions in Photo 17.

Photo 19 - Face of south wing of east MSEW. Note soil staining.

Photo 20 - Near field view of typical 1 inch setback per block.

Photo 21 - Conditions beneath south end of culvert.

Photo 22 - Near field view of typical block alignment above culvert arch.

Photo 23 - West MSEW looking northeast.

Photo 24 - Southwest end of culvert immediately east of embankment instability.

Photo 25 - Area of embankment instability west of south end of culvert.

Photo 26 - River rock and corrugated drain pipes along toe of south wing of east MSEW just above stream.

Photo 27 - Soil staining on face of west MSEW above culvert.

Photo 28 - Near field view of embankment instability looking east toward culvert.

Photo 29 - Wooded area above north wing of east MSEW.

Photo 30 - Concrete headwall at north end of north wing of east MSEW.

Photo 31 - Void immediately behind concrete wing wall.

Photo 32 - Mature vegetation immediately behind north end of north wing of east MSEW.

Photo 33 - One to two course of exposed block back side of east MSEW above north wing.

HAND AUGER

LOCATION DIAGRAM

SOURCE: GOOGLE EARTH

PUTNEY BRIDGE LANE

SIMPSONVILLE, SOUTH CAROLINA

ENGINEER SG	SCALE NONE
DRAFTSMAN JMC	PROJECT NO. 39-1298
REVISIONS	SHEET 3
	DATE 04/11/16

HAND AUGER BORING SUMMARY
PUTNEY BRIDGE LANE
GREENVILLE, SOUTH CAROLINA
ECS PROJECT No. 39-1298

TEST LOCATION	APPROX. DEPTH (ft)	SOIL DESCRIPTION	USCS CLASSIFICATION	DCP RESISTANCE BLOWS PER 1-3/4" INCREMENT
HAB-1	0.0			
	-1.0	FILL - Dark Red Brown Fine Sandy SILT, Moist	ML/MH	7, 8, 8
	-2.0	FILL - Dark Red Brown Silty Fine SAND, Moist to Wet	SM	9, 10, 9
	-3.0	FILL - Dark Red Brown, Fine Sandy SILT, Trace Mica, Moist	ML	2, 3, 2
	-4.0	FILL - Dark Red Brown, Fine to Medium Sandy SILT, Wet	ML	3, 4, 4
	-5.0	FILL - Dark Red Brown, Fine to Medium Sandy SILT, Wet	ML	3, 3, 4
		AUGER REFUSAL @ 6 FEET		

TEST LOCATION	APPROX. DEPTH (ft)	SOIL DESCRIPTION	USCS CLASSIFICATION	DCP RESISTANCE BLOWS PER 1-3/4" INCREMENT
HAB-2	0.0			
	-1.0	FILL - Dark Red Brown Fine Sandy SILT, Trace Mica, Some Rock Fragments, Moist	ML	8, 8, 9
	-2.0	FILL - Dark Red Brown Fine Sandy SILT, Trace Mica, Some Rock Fragments, Moist	ML	5, 7, 7
	-3.0	FILL - Dark Red Brown Fine Sandy SILT, Trace Mica, Some Rock Fragments, Moist	ML	5, 6, 7
	-4.0	FILL - Dark Red Brown Fine Sandy SILT, Trace Mica, Some Rock Fragments, Moist	ML	5, 7, 8
	-5.0	FILL - Dark Red Brown Fine Sandy SILT, Trace Mica and Organics, Some Rock Fragments, Moist	ML	6, 6, 8
		END OF BORING @ -6 FEET		

TEST LOCATION	APPROX. DEPTH (ft)	SOIL DESCRIPTION	USCS CLASSIFICATION	DCP RESISTANCE BLOWS PER 1-3/4" INCREMENT
HAB-3	0.0			
	-1.0	RESIDUUM - Dark Red Brown Silty Fine SAND, Wet	SM	4, 4, 4
	-2.0	Dark Red Brown Fine Sandy SILT, Some Roots, Wet	ML	3, 4, 5
	-3.0	Brown Fine Sandy SILT, Trace Small Roots, Wet	ML	1, 2, 2
	-4.0	Brown Fine Sandy SILT, Trace Small Roots, Wet	ML	3, 3, 4
	-5.0	Brown Fine Sandy SILT, Trace Small Roots, Wet	ML	3, 4, 4
		END OF BORING @ -6 FEET		

TEST LOCATION	APPROX. DEPTH (ft)	SOIL DESCRIPTION	USCS CLASSIFICATION	DCP RESISTANCE BLOWS PER 1-3/4" INCREMENT
HAB-4	0.0			
	-1.0	ALLUVIUM - Brown and Gray Silty Fine SAND and Gravel, Wet	SM	2, 10, 20+
		AUGER REFUSAL @ -2 FEET		

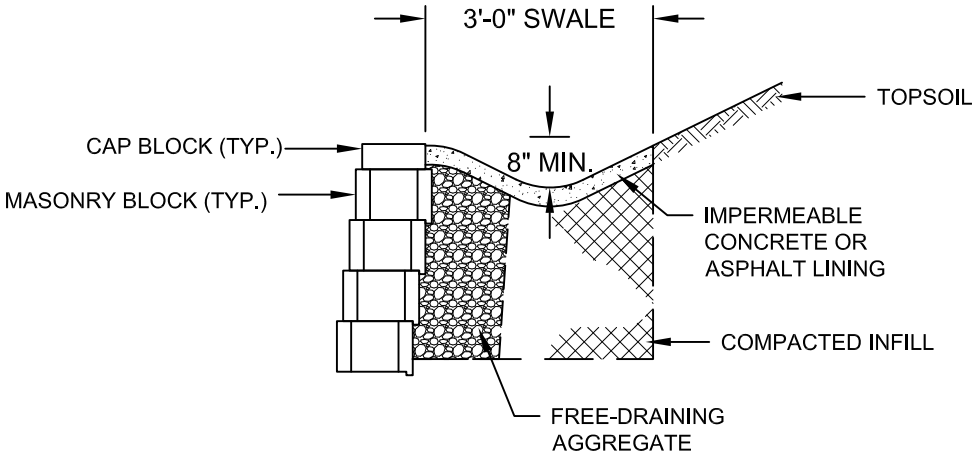

OPTION A

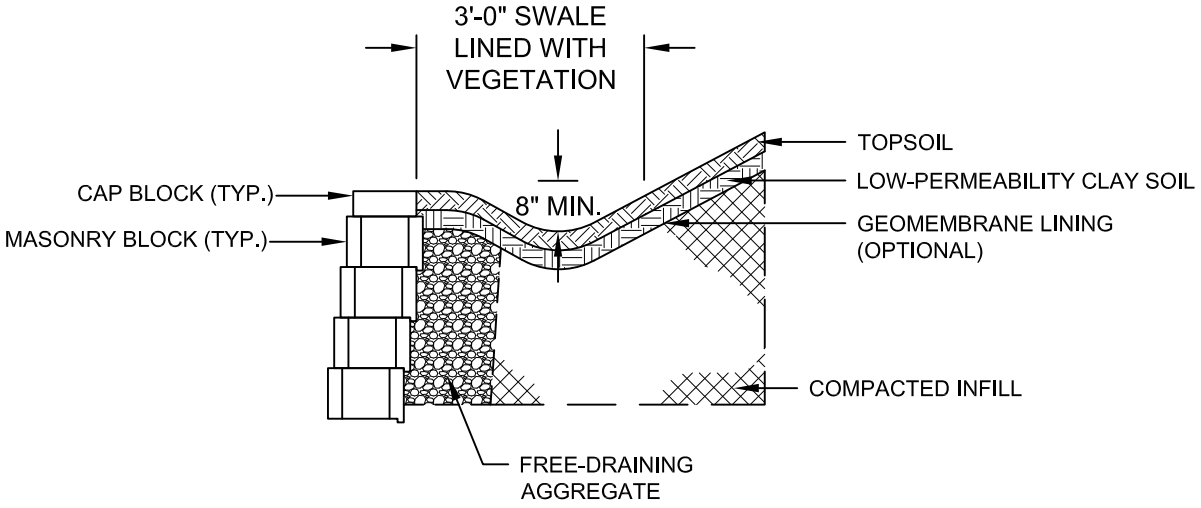

OPTION B

TYPICAL DRAINAGE SWALE DIAGRAM	ECS	**PUTNEY BRIDGE LANE**	ENGINEER SG	SCALE NONE
			DRAFTSMAN JMC	PROJECT NO. 39-1298
			REVISIONS	SHEET 4
		SIMPSONVILLE, SOUTH CAROLINA		DATE 04/11/16